THIS DRAWING IS UNPUBLISHED. RELEASED FOR PUBLICATION -,- .
© COPYRIGHT - By - ALL RIGHTS RESERVED.

LOC	DIST
—	—

REVISIONS

P	LTR	DESCRIPTION	DATE	DWN	APVD
	C	REVISED PER ECO-13-015855	10OCT2013	KH	RH

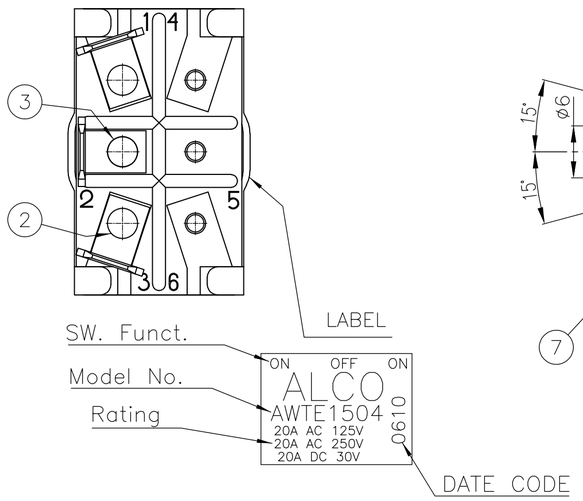

EXAMPLE
0610
Year Month
2006 Oktober

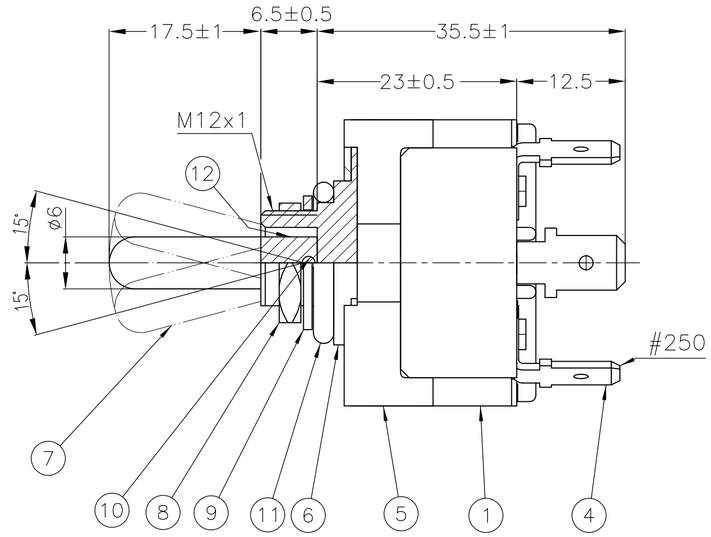

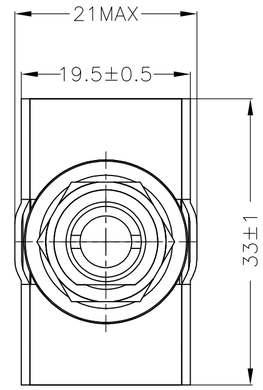

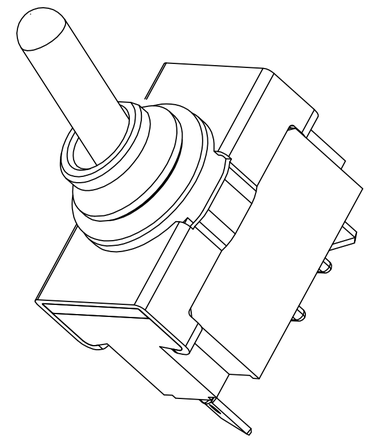

1 OPERATING TEMPERATURE −20°C TO +70°C

2 OPERATING FORCE MAX 29,4N

3 ALL MATERIALS AND FINISHES COMPLY WITH ROHS DIRECTIVE

MOUNTING HOLE

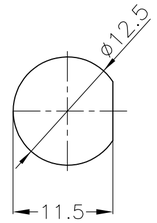

NUT (8)

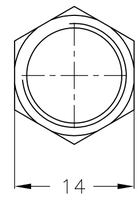

TERMINAL #250

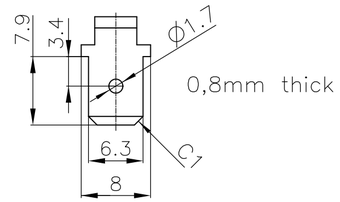

1968500

Specifications

Rating	Initial Contact Resistance	Insulation Resistance	Dielectric Strenght	Endurance
AC 125V 20A AC 250V 20A DC 30V 20A	MAX 10 milliohms at DC 2 ~ 4V 1A	MIN 1000 M Ohms at DC 500V	AC 1,5kV/1 min (AC 1,8kV/1 sec)	electrically 20.000 cycles at 20 cycles/min (rated load resistive) mechanically 40.000 cycles at 20 cycles/min

Function Chart

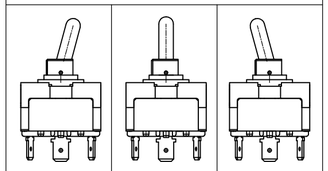

TE PN	PART	Terminals 1 and 2		Terminals 2 and 3
7-6437630-0	AWTD1504	ON	NONE	ON
7-6437630-1	AWTE1504	ON	OFF	ON
7-6437630-4	AWTF1504	ON	NONE	(ON)
7-6437630-5	AWTG1504	(ON)	OFF	(ON)
7-6437630-6	AWTH1504	ON	OFF	(ON)

(ON) : momentary action
OFF : mechanical position without electrical connection
NONE : no mechanical position

MATERIALS CHART

1	Case	PM-EG	
2	F Contact	Silver alloy + C3602BD	
3	Common Contact	C3602BD	
4	Terminal	C2680R	
5	Frame	SPCC	EP-Fe/Zn4/CM
6	Bushing	Zinc alloy	EP-Zn/Cu5,Ni10b
7	Actuator	C3602BD-F	Ep-Cu/Ni3
8	Nut	C3602BD	Ep-Cu/Ni3b
9	L Washer	SK-5	Ep-Fe/Ni3b
10	Shaft	SUS	
11	Rubber seal	NBR	
12	Insert molded rubber	Silcon rubber	
PART NO:	PART NAME:	MATERIAL/SURFACE:	OPTIONAL DESCRIPTION

PART LIST

TOLERANCES UNLESS OTHERWISE SPECIFIED ACCORDING TO ISO 8015 and ISO 2768-f

THIS DRAWING IS A CONTROLLED DOCUMENT.

DIMENSIONS: mm

TOLERANCES UNLESS OTHERWISE SPECIFIED:
0 PLC ± -
1 PLC ± -
2 PLC ± -
3 PLC ± -
4 PLC ± -
ANGLES ± -

MATERIAL -

FINISH -

DWN WEIDEN 05SEP2007
CHK -
APVD -
PRODUCT SPEC —
APPLICATION SPEC —
WEIGHT —

TE Connectivity

NAME
POWER TOGGLE SWITCH SINGLE POLE
PANEL MOUNTING WATERTIGHT

SIZE	CAGE CODE	DRAWING NO	RESTRICTED TO
A2	00779	C-1968500	—

CUSTOMER DRAWING | SCALE 1:1 | SHEET 1 OF 1 | REV C

1471-9 (3/11)